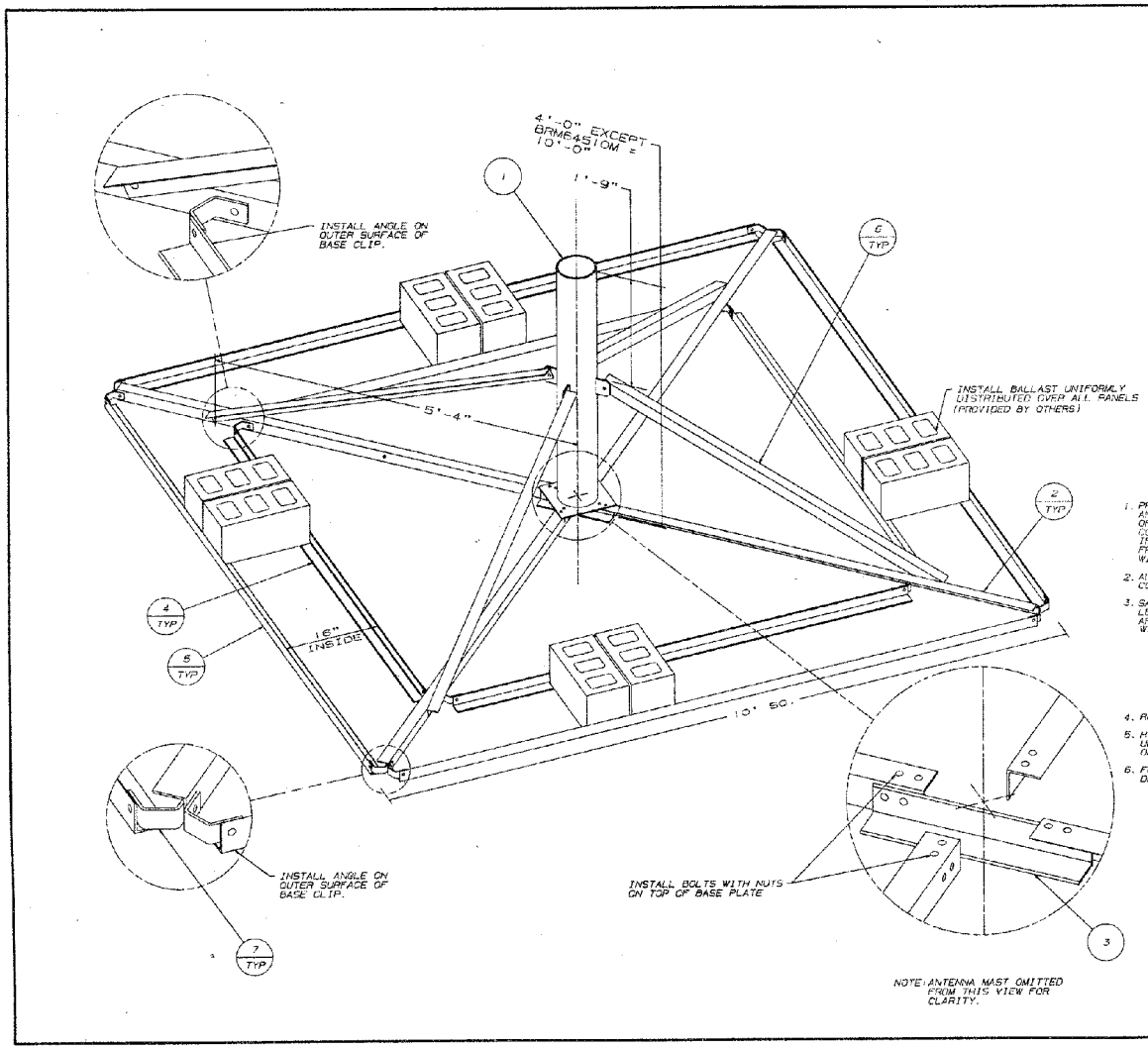

BRM6 NO.	MAST SPECIFICATIONS	
	PART NO.	DESCRIPTION
BRM63OM	KY2110	BRM6 WITH 2.5 STD. PIPE(2-7/8 OD) X 45-3/4"
BRM63SM	KY1576	BRM6 WITH 3 STD. PIPE(3-1/2 OD) X 45-3/4"
BRM64OM	KY1578	BRM6 WITH 3-1/2 STD. PIPE(4 OD) X 45-3/4"
BRM64SM	KY1579	BRM6 WITH 4 STD. PIPE(4-1/2 OD) X 45-3/4"
BRM65SM	KY1590	BRM6 WITH 5 STD. PIPE(5-9/16 OD) X 45-3/4"
BRM66SM	KY1591	BRM6 WITH 6 STD. PIPE(6-5/8 OD) X 45-3/4"
BRM6451OM	KY2043	BRM6 WITH 4 STD. PIPE(4-1/2 OD) X 117-3/4"

BRM6 BILL OF MATERIAL

ITEM	QUAN.	PART NO.	DESCRIPTION	DWG. NO.
1	1	SEE CHART	ANTENNA MAST SUPPORT	C890745
2	4	KY1573M	BASE DIAGONAL	A890736
3	1	KY1574	BASE ANGLE CENTER	B890739
4	4	KY1572	BASE GIRT INNER	B890744
5	4	KY1571	BASE GIRT OUTER	B890740
6	4	KY1575	KNEE BRACE ANGLE	B890741
7	1	KY1577A	HARDWARE KIT	N/A

KY1577A HARDWARE KIT BILL OF MATERIAL

ITEM	QUAN.	PART NO.	DESCRIPTION	DWG. NO.
8	16	KY1576	BASE CLIPS	B881269
9	44	210079G	BOLT 3/8 X 1	N/A
10	44	230024	NUT 3/8 DIA.	N/A

NOTE: ALL PARTS HOT DIP GALVANIZED

GENERAL NOTES

1. PRIOR TO INSTALLATION VERIFY THAT THE INSTALLATION, ROOF MATERIAL AND SUPPORTING STRUCTURE HAVE BEEN INVESTIGATED AND FOUND CAPABLE OF WITHSTANDING ALL LOADS IMPOSED BY THE PROPOSED ANTENNA SYSTEM. CONFIRM THAT THE SUPPORTING SURFACES, ANCHORS, AND/OR SAFETY CABLES, IF REQUIRED, HAVE BEEN FOUND TO BE ADEQUATE TO RESIST THE REACTIONS FROM THE ANTENNA SYSTEM AND THAT THE INSTALLATION WILL BE IN CONFORMANCE WITH ALL APPLICABLE LOCAL, STATE AND FEDERAL REQUIREMENTS.
2. ALL ANTENNA INSTALLATIONS MUST BE GROUNDED TO MEET APPLICABLE CODES.
3. SAFETY CABLE KITS CONSISTING OF A 3/16 EHS SAFETY CABLE (3990 LBS ULTIMATE STRENGTH) WITH SIX CLAMPS TO SECURE MOUNT AND/OR BALLAST ARE AVAILABLE AS AN OPTION. USE THREE CABLE CLAMPS AT EACH END CONNECTION WITH THE U BOLT ON THE DEAD END OF THE CABLE.

SAFETY CABLE LENGTH	PART NUMBER
50 FT	SCK50
100 FT	SCK100
150 FT	SCK150

4. ROOF PADS ARE AVAILABLE AS AN OPTION. PART NUMBER BRMGPAD.
5. HIGH STRENGTH BOLTS ARE PROVIDED. NUT LOCKING IS DEPENDENT UPON INITIAL TENSION IN BOLT. INSPECT MOUNT, ANTENNA AND TIGHTNESS OF NUTS AT SIX MONTH MAXIMUM INTERVALS.
6. FOR ASSISTANCE IN DETERMINING BALLAST REQUIREMENTS REFER TO DRAWING A890747, 1-8, AND A942359, 1-8.

No.	Revision Description	Date	Dwn By	Chk By	Appr By
R5	ADD P/N BRM63OM	6-13-96	JDM	WMN	TS
R4	ADD P/N BRM6451OM	11/7/94	WDU	WMN	TS
R3	P/N 230024 WAS 240019	12/8/89	WDU	WMN	TMS
R2	ADD HOLE FOR ADD. BALLAST KIT	11/30/88	WDU	WMN	TS
R1	P/N 240019 WAS P/N 340034	3/7/88	WDU	WMN	TS

THIS DRAWING IS THE PROPERTY OF ROHN. IT IS NOT TO BE REPRODUCED, COPIED OR TRACED IN WHOLE OR IN PART WITHOUT OUR WRITTEN CONSENT.

ROHN

Status: NONE	By	Date
Drawn:	WDU	2/10/89
Checked:	WMN	2/14/89
App. Eng.:	TS	2/24/89
App. Sales:	DL	2/24/89

Title: BRM6 BALLAST ROOF MOUNT

DWG. FILE:

DRAWING NO.: D890722R5